Original Stud Style

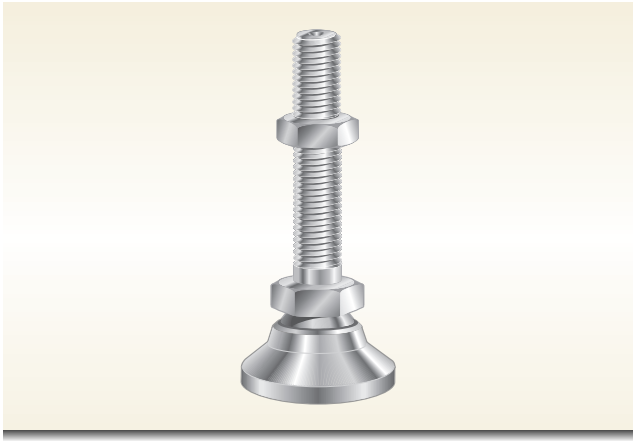

Original Leveling Devices

Inch-Standard Length

Steel

Vlier Stud Style Steel Leveling Devices provide an integrally machined stud as part of the ball. Stud Style Bases swivel 15° off the centerline to adjust to uneven surfaces and level machine tools, electronic racks, benches, etc. Zinc plate with gold chromate finish is standard. Black and clear (silver) finishes are optional and require extra lead time.

Stainless Steel

Vlier Stud Style Stainless Steel Leveling Devices offer the advantage of an all-stainless steel design for maximum protection against rust and corrosion.

Steel (Fine Thread)

Ideal for applications which require a more sensitive leveling adjustment.

Special Features

- Hardened ball
- Stud and integrally machined ball
- Large diameter base support
- 15° swivel off centerline

Stud Style - Inch - Standard Length (Metal)
Unified ANSI & Fine Thread

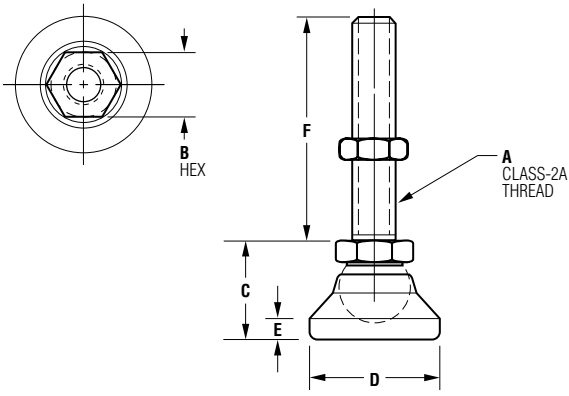

Stud Style - Steel/Stainless Steel								
Part No.		Max load (lbs)	A	B	C	D	E	F
Steel	Stainless Steel							
P298S	**SSP298S**	700	10-32	3/8	17/32	3/4	7/64	1
P300S	**SSP300S**	1100	1/4-20	1/2	45/64	1	5/32	1 1/4
P304S	**SSP304S**	3,750	3/8-16	5/8	7/8	1 1/4	3/16	2
P306S	**SSP306S**	5,000	1/2-13	3/4	1 1/8	1 7/8	1/4	2
P308S	**SSP308S**	6,000	5/8-11	7/8	1 1/4	2 1/2	5/16	2
P310S	**SSP310S**	7,200	3/4-10	1 1/16	1 1/2	3	1/2	2
P312S	**SSP312S**	22,000	1-8	1 3/8	1 7/8	4	13/32	4 1/4

Steel Base, Steel Stud (Fine Thread)							
Part No.	**Max load (lbs)**	**A**	**B**	**C**	**D**	**E**	**F**
FP304S	3,750	3/8-24	5/8	7/8	1-1/4	3/16	2
FP306S	5,000	1/2-20	3/4	1-1/8	1-7/8	1/4	2
FP308S	6,000	5/8-18	7/8	1-1/4	2-1/2	5/16	2
FP310S	7,200	3/4-16	1-1/16	1-1/2	3	1/2	2
FP312S	22,000	1-12	1-3/8	1-7/8	4	13/32	4-1/4

Ordering for Optional Steel Finishes

To order black, add "1" at the end of the part number. To order silver, add "2" at the end of the part number. Allow four weeks lead time.

Original Stud Style

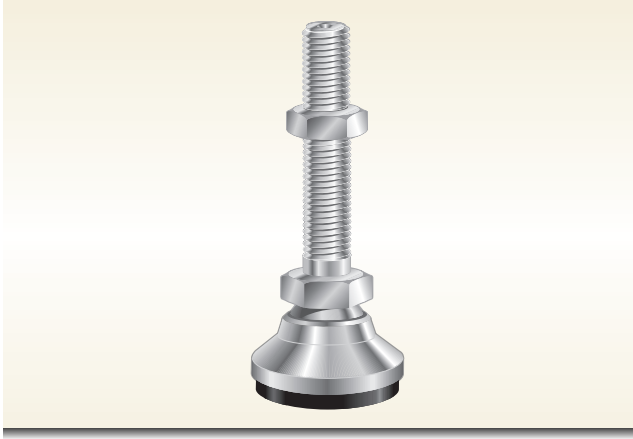

Original Leveling Devices

Inch - Standard Length

Steel with Elastomer Pad

Vlier Stud Style Steel with Elastomer Pads offer a .125 neoprene elastomer bonded to the bottom of the base to provide non-skid support. Zinc plate with gold chromate finish is standard. Black and clear (silver) finishes are optional and require extra lead time.

Stainless Steel with Elastomer Pad

Vlier Stud Style Stainless Steel with Elastomer Pads offer the advantage of an all-stainless steel design for maximum protection against rust and corrosion.

Special Features

- Non-skid elastomer pad
- Protects floor or surface finish
- Hardened ball
- Stud and integrally machined ball
- Large diameter base support
- 15° swivel off centerline

Stud Style - Inch - Standard Length (Elastomer Pad)

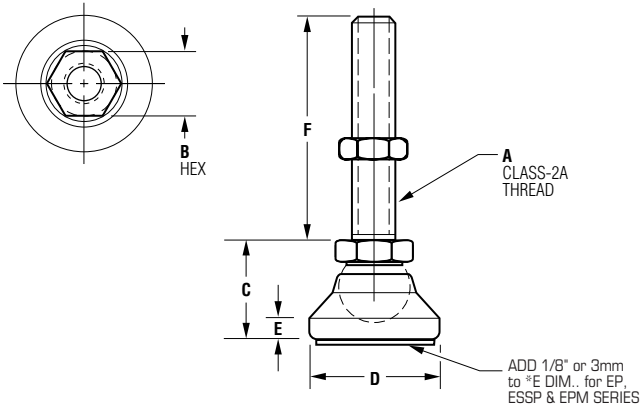

Steel Base w/Elastomer Pad, Steel Stud							
Part No.	**Max (Lbs) Work Load**	**A**	**B**	**C**	**D**	**E**	**F**
EP298S	525	10-32	⅜	17/32	¾	7/64	1
EP300S	800	¼-20	½	45/64	1	5/32	1¼
EP304S	2,800	⅜-16	⅝	⅞	1¼	3/16	2
EP306S	3,750	½-13	¾	1⅛	1⅞	¼	2
EP308S	4,500	⅝-11	⅞	1¼	2½	5/16	2
EP310S	5,400	¾-10	1 1/16	1½	3	½	2
EP312S	16,400	1-8	1⅜	1⅞	4	13/32	4¼

Stainless Base w/Elastomer Pad, Stainless Stud							
Part No.	**Max load (lbs)**	**A**	**B**	**C**	**D**	**E**	**F**
ESSP298S	525	10-32	3/8	17/32	3/4	7/64	1
ESSP300S	800	1/4-20	1/2	45/64	1	5/32	1 1/4
ESSP304S	2,800	3/8-16	5/8	7/8	1 1/4	3/16	2
ESSP306S	3,750	1/2-13	3/4	1 1/8	1 7/8	1/4	2
ESSP308S	4,500	5/8-11	7/8	1 1/4	2 1/2	5/16	2
ESSP310S	5,400	3/4-10	1 1/16	1 1/2	3	1/2	2
ESSP312S	16,400	1-8	1 3/8	1 7/8	4	13/32	4 1/4

Original Leveling Devices

Inch-Standard Length

Delrin® Base with Steel Stud

Vlier Stud Style Delrin Base/Steel Stud Leveling Devices feature natural (white) delrin plastic bases that provide protection for floor or surface finishes. Delrin offers high resistance to repeated impacts, moisture, solvents and heat up to 190°F. Zinc plate with gold chromate finish is standard. Black and clear(silver) finishes are optional and require extra lead time.

Delrin® Base with Stainless Steel Stud

Stainless Steel offers additional protection against rust and corrosion.

Special Features

- Hardened ball
- Protects surface finish
- Long-life, high-impact Delrin pad
- Stud and integrally machined ball
- Large diameter base support
- 15° swivel off centerline

Stud Style - Inch - Standard Length (Delrin)

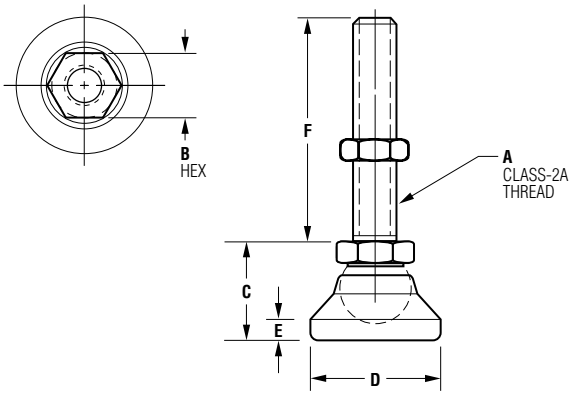

Delrin Base, Steel Stud							
Part No.	**Max (Lbs) Work Load**	**A**	**B**	**C**	**D**	**E**	**F**
NP298S	150	10–32	⅜	17/32	¾	7/64	1
NP300S	200	¼-20	½	45/64	1	5/32	1¼
NP304S	300	⅜-16	⅝	⅞	1¼	3/16	2
NP306S	700	½-13	¾	1⅛	1⅞	¼	2
NP308S	1200	⅝-11	⅞	1¼	2½	5/16	2
NP310S	1800	¾-10	1 1/16	1½	3	½	2
NP312S	2400	1-8	1⅜	1⅞	4	13/32	4¼

Delrin® Base, Stainless Steel Stud							
Part No.	**Max load (lbs)**	**A**	**B**	**C**	**D**	**E**	**F**
SSNP298S	150	10-32	3/8	17/32	3/4	7/64	1
SSNP300S	200	1/4-20	1/2	45/64	1	5/32	1-1/4
SSNP304S	300	3/8-16	5/8	7/8	1-1/4	3/16	2
SSNP306S	700	1/2-13	3/4	1-1/8	1-7/8	1/4	2
SSNP308S	1,200	5/8-11	7/8	1-1/4	2-1/2	5/16	2
SSNP310S	1,800	3/4-10	1-1/16	1-1/2	3	1/2	2
SSNP312S	2,400	1-8	1-3/8	1-7/8	4	13/32	4-1/4

Ordering for Optional Steel Finishes

To order black, add "1" at the end of the part number. To order silver, add "2" at the end of the part number. Allow four weeks lead time.

Original Stud Style

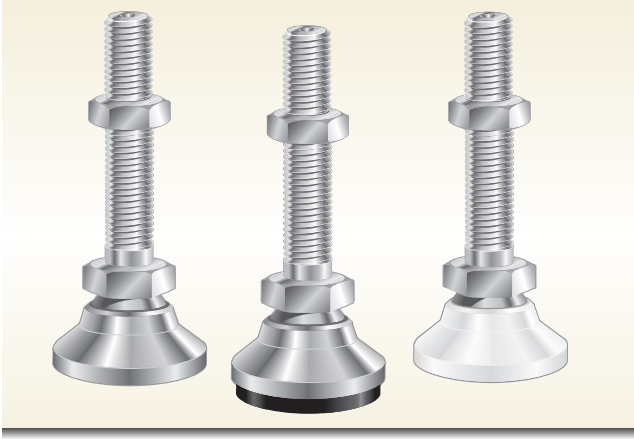

Original Leveling Devices

Metric

Steel

Vlier Stud Style Steel Leveling Devices provide an integrally machined stud as part of the ball. Stud Style Bases swivel 15° off the centerline to adjust to uneven surfaces and level machine tools, electronic racks, benches, etc. Zinc plate with gold chromate finish is standard. Black and clear(silver) finishes are optional and require extra lead time.

Steel with Elastomer Pad

Vlier Stud Style Steel with Elastomer Leveling Pads offer a .125 neoprene elastomer bounded to the bottom of the base to provide non-skid support.

Stainless Steel

Delrin Base

Vlier Stud Style Steel with Delrin Base Leveling Devices feature natural (white) Delrin plastic bases that provide protection for floor or surface finishes. Delrin offers high resistance to repeated impacts, moisture solvents and heat up to 190° F.

Special Features

- Non-skid elastomer pad
- Protects floor or surface finish
- Hardened ball
- Stud and integrally machined ball
- Large diameter base support
- 15° swivel off centerline

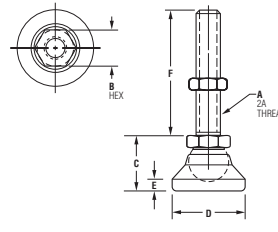

Stud Style - Metric

METRIC Steel Base, Steel Stud							
Part No.	**Max load (lbs)**	**A**	**B mm**	**C mm (in.)**	**D mm (in.)**	**E mm (in.)**	**F mm (in.)**
PM10S	1705 kg (3750 lbs)	M10 X 1.5	17	22 (.87)	32 (1.26)	5 (.20)	51 (2.00)
PM12S	2273 kg (5000 lbs)	M12 X 1.75	19	29 (1.14)	48 (1.89)	6 (.24)	51 (2.00)
PM16S	2727 kg (6000 lbs)	M16 X 2.0	24	32 (1.26)	64 (2.52)	8 (.31)	51 (2.00)
PM20S	3273 kg (7200 lbs)	M20 X 2.5	30	38 (1.50)	76 (3.00)	13 (.51)	51 (2.00)
NEW SIZE **PM24S**	9979 kg (22,000 lbs)	M24 X 3.0	35	48 (1.88)	102 (4.00)	10 (.41)	108 (4.25)

METRIC Steel Base w/Elastomer Pad, Steel Stud							
Part No.	**Max load (lbs)**	**A**	**B mm**	**C mm (in.)**	**D mm (in.)**	**E mm (in.)**	**F mm (in.)**
EPM10S	1273 kg (2800 lbs)	M10 X 1.5	17	22 (.87)	32 (1.26)	5 (.20)	51 (2.00)
EPM12S	1705 kg (3750 lbs)	M12 X 1.75	19	29 (1.14)	48 (1.89)	6 (.24)	51 (2.00)
EPM16S	2046 kg (4500 lbs)	M16 X 2.0	24	32 (1.26)	64 (2.52)	8 (.31)	51 (2.00)
EPM20S	2455 kg (5400 lbs)	M20 X 2.5	30	38 (1.50)	76 (3.00)	13 (.51)	51 (2.00)

METRIC Delrin Base, Steel Stud							
Part No.	**Max load (lbs)**	**A**	**B mm**	**C mm (in.)**	**D mm (in.)**	**E mm (in.)**	**F mm (in.)**
NPM10S	136 kg (300 lbs)	M10 X 1.5	17	22 (.87)	32 (1.26)	5 (.20)	51 (2.00)
NPM12S	318 kg (700 lbs)	M12 X 1.75	19	29 (1.14)	48 (1.89)	6 (.24)	51 (2.00)
NPM16S	546 kg (1200 lbs)	M16 X 2.0	24	32 (1.26)	64 (2.52)	8 (.31)	51 (2.00)
NPM20S	818 kg (1800 lbs)	M20 X 2.5	30	38 (1.50)	76 (3.00)	13 (.51)	51 (2.00)

METRIC Stainless Steel Base, Stainless Steel Stud							
Part No.	**Max load (lbs)**	**A**	**B mm**	**C mm (in.)**	**D mm (in.)**	**E mm (in.)**	**F mm (in.)**
SSPM10S	136 kg (300 lbs)	M10 X 1.5	17	22 (.87)	32 (1.26)	5 (.20	51 (2.00)
SSPM12S	2273 kg (5000 lbs)	M12 X 1.75	19	29 (1.13)	48 (1.88)	6 (.25)	51 (2.00)
SSPM16S	2727 kg (6000 lbs)	M16 X 2.0	24	32 (1.25)	64 (2.50)	8 (.31)	51 (2.00)
SSPM20S	3273 kg (7200 lbs)	M20 X 2.5	30	38 (1.50)	76 (3.0)	13 (.50)	51 (2.00)
SSPM24S	9979 kg (22,000 lbs)	M24 X 3.0	35	48 (1.88)	102.00 (4.00)	10.00 (.41)	108 (4.25)

Ordering for Optional Steel Finishes

To order black, add "1" at the end of the part number. To order silver, add "2" at the end of the part number. Allow four weeks lead time.

Original Stud Style

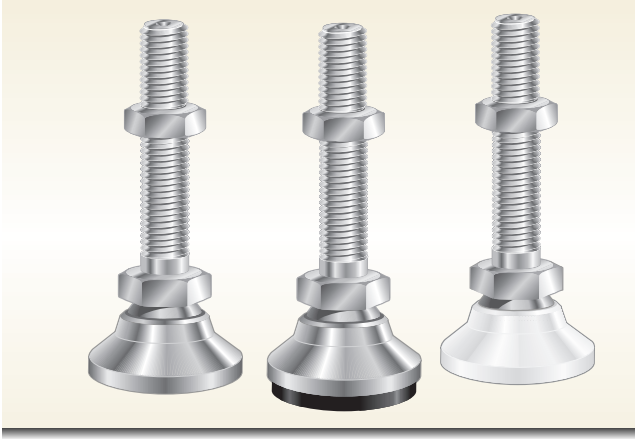

Original Leveling Devices

Extended Length

Steel

Vlier Stud Style Extended Length Steel Leveling Devices provide an integrally machined stud as part of the ball. They are for applications which require additional clearance. Zinc plate with gold chromate finish is standard. Black and clear (silver) finishes are optional and require extra lead time.

Steel with Elastomer Pad

Vlier Stud Style Extended Length Steel with Elastomer Pads offer the advantage of an all-stainless steel design for maximum protection against rust & corrosion.

Delrin® Base with Steel Stud

Vlier Stud Style Extended Length Delrin Base Leveling Devices provide protection for floor or surface finishes.

Special Features

- Extended length studs twice as long as standard length
- Stud and integrally machined ball
- Large diameter base support
- 15° swivel off centerline

Stud Style - Extended Length (Steel)

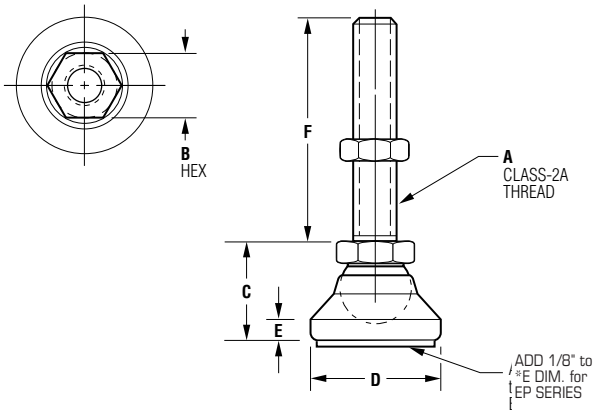

Stud Type Pads Extended Length - Steel							
Part No.	**Max (Lbs) Work Load**	**A**	**B**	**C**	**D**	**E**	**F**
P299S	700	10-32	3/8	17/32	3/4	7/64	2
P301S	1100	1/4-20	1/2	45/64	1	5/32	2.5
P305S	3750	3/8-16	5/8	7/8	1 1/4	3/16	4
P307S	5000	1/2-13	3/4	1 1/8	1 7/8	1/4	4
P309S	6000	5/8-11	7/8	1 1/4	2 1/2	5/16	4
P311S	7200	3/4-10	1 1/16	1 1/2	3	1/2	4
P313S	22000	1-8	1 3/8	1 7/8	4	13/32	8

Stud Type Pads Extended Length - Steel with Elastomer							
Part No.	**Max (Lbs) Work Load**	**A**	**B**	**C**	**D**	**E**	**F**
EP299S	525	10-32	3/8	17/32	3/4	7/64	2
EP301S	800	1/4-20	1/2	45/64	1	5/32	2.5
EP305S	2800	3/8-16	5/8	7/8	1 1/4	3/16	4
EP307S	3750	1/2-13	3/4	1 1/8	1 7/8	1/4	4
EP309S	4500	5/8-11	7/8	1 1/4	2 1/2	5/16	4
EP311S	5400	3/4-10	1 1/16	1 1/2	3	1/2	4
EP313S	16400	1-8	1 3/8	1 7/8	4	13/32	8

Stud Type Pads Extended Length - Steel with Delrin							
Part No.	**Max (Lbs) Work Load**	**A**	**B**	**C**	**D**	**E**	**F**
NP299S	150	10-32	3/8	17/32	3/4	7/64	2
NP301S	200	1/4-20	1/2	45/64	1	5/32	2.5
NP305S	300	3/8-16	5/8	7/8	1 1/4	3/16	4
NP307S	700	1/2-13	3/4	1 1/8	1 7/8	1/4	4
NP309S	1200	5/8-11	7/8	1 1/4	2 1/2	5/16	4
NP311S	1800	3/4-10	1 1/16	1 1/2	3	1/2	4
NP313S	2400	1-8	1 3/8	1 7/8	4	13/32	8

Ordering for Optional Steel Finishes

To order black, add "1" at the end of the part number. To order silver, add "2" at the end of the part number. Allow four weeks lead time.

Original Stud Style

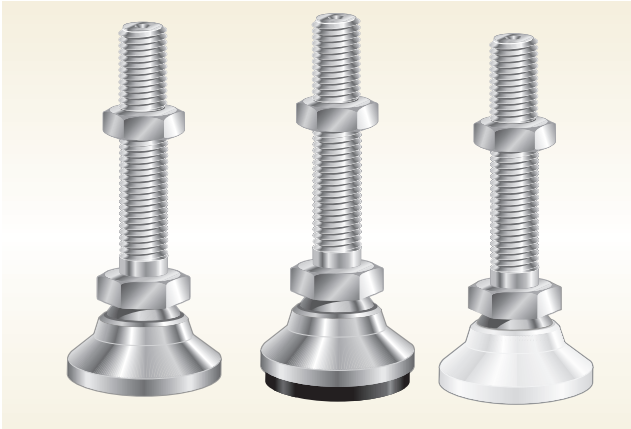

Original Leveling Devices

Extended Length

Stainless Steel
Stainless Steel with Elastomer Pad
Delrin® Base with Stainless Steel Stud

Extended Length Stainless Steel Leveling Devices are for applications which require additional clearance, and offer maximum protection against rust and corrosion.

Special Features

- Extended length studs twice as long as standard length
- Stud and integrally machined ball
- Large diameter base support
- 15° swivel off centerline

Stud Style - Extended Length (Stainless Steel)

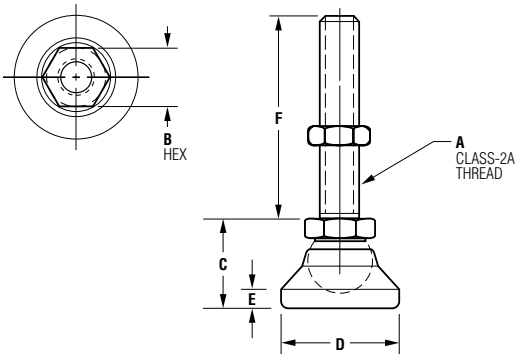

EXTENDED LENGTH Stainless Steel Base, Stainless Steel Stud							
Part No.	**Max load (lbs)**	**A**	**B**	**C**	**D**	**E**	**F**
SSP299S	700	10-32	3/8	17/32	3/4	7/64	2
SSP301S	1,100	1/4-20	1/2	45/64	1	5/32	2-1/2
SSP305S	3,750	3/8-16	5/8	7/8	1-1/4	3/16	4
SSP307S	5,000	1/2-13	3/4	1-1/8	1-7/8	1/4	4
SSP309S	6,000	5/8-11	7/8	1-1/4	2-1/2	5/16	4
SSP311S	7,200	3/4-10	1-1/16	1-1/2	3	1/2	4
SSP313S	22,000	1-8	1-3/8	1-7/8	4	13/32	8

EXTENDED LENGTH Stainless Steel Base w/Elastomer Pad, Stainless Steel Stud							
Part No.	**Max load (lbs)**	**A**	**B**	**C**	**D**	**E**	**F**
ESSP299S	525	10-32	3/8	17/32	3/4	7/64	2
ESSP301S	800	1/4-20	1/2	45/64	1	5/32	2-1/2
ESSP305S	2,800	3/8-16	5/8	7/8	1-1/4	3/16	4
ESSP307S	3,450	1/2-13	3/4	1-1/8	1-7/8	1/4	4
ESSP309S	4,500	5/8-11	7/8	1-1/4	2-1/2	5/16	4
ESSP311S	5,400	3/4-10	1-1/16	1-1/2	3	1/2	4
ESSP313S	16,400	1-8	1-3/8	1-7/8	4	13/32	8

EXTENDED LENGTH-Delrin® Base, Stainless Steel Stud							
Part No.	**Max load (lbs)**	**A**	**B**	**C**	**D**	**E**	**F**
SSNP299S	150	10-32	3/8	17/32	3/4	7/64	2
SSNP301S	200	1/4-20	1/2	45/64	1	5/32	2-1/2
SSNP305S	300	3/8-16	5/8	7/8	1-1/4	3/16	4
SSNP307S	700	1/2-13	3/4	1-1/8	1-7/8	1/4	4
SSNP309S	1200	5/8-11	7/8	1-1/4	2-1/2	5/16	4
SSNP311S	1800	3/4-10	1-1/16	1-1/2	3	1/2	4
SSNP313S	2400	1-8	1-3/8	1-7/8	4	13/32	8

Ordering for Optional Steel Finishes

To order black, add "1" at the end of the part number. To order silver, add "2" at the end of the part number. Allow four weeks lead time.

Original Socket Style

Original Leveling Devices

Inch

Steel

Vlier Socket Style Steel Leveling Devices swivel 15° off the centerline to adjust to uneven surfaces and level machine tools, electronic racks, benches, etc. Zinc plate with gold chromate finish is standard. Black and clear (silver) finishes are optional and require extra lead time.

Stainless Steel

Vlier Socket Style Stainless Steel Leveling Devices offer the advantage of an all-stainless steel design for maximum protection against rust and corrosion.

Fine Thread-NEW

Ideal for applications which require a more sensitive leveling adjustment.

Special Features

- Hardened ball
- Large diameter base support
- 15° swivel off centerline

Socket Style - Inch (Metal)
Unified ANSI Course & Fine Thread

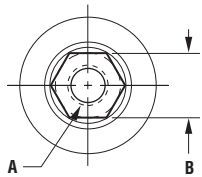

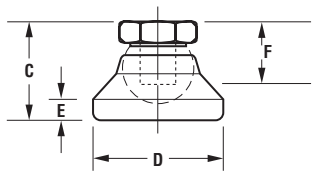

Socket Style - Steel/Stainless Steel								
Part No.		Max load (lbs)	A	B	C	D	E	F
Steel	Stainless Steel							
P298B	**SSP298B**	700	10-32	3/8	17/32	3/4	7/64	15/64
P300B	**SSP300B**	1100	1/4-20	1/2	45/64	1	5/32	5/16
P304B	**SSP304B**	3,750	3/8-16	5/8	7/8	1 1/4	3/16	3/8
P306B	**SSP306B**	5,000	1/2-13	3/4	1 1/8	1 7/8	1/4	7/16
P308B	**SSP308B**	6,000	5/8-11	7/8	1 1/4	2 1/2	5/16	7/16
P310B	**SSP310B**	7,200	3/4-10	1 1/16	1 1/2	3	1/2	5/8
P312B	**SSP312B**	22,000	1-8	1 3/8	1 7/8	4	13/32	13/16

Steel Base, Steel Socket (Fine Thread)							
Part No.	**Max load (lbs)**	**A**	**B**	**C**	**D**	**E**	**F**
FP304B	3,750	3/8-24	5/8	7/8	1-1/4	3/16	3/8
FP306B	5,000	1/2-20	3/4	1-1/8	1-7/8	1/4	7/16
FP308B	6,000	5/8-18	7/8	1-1/4	2-1/2	5/16	7/16
FP310B	7,200	3/4-16	1-1/16	1-1/2	3	1/2	5/8
FP312B	22,000	1-12	1-3/8	1-7/8	4	13/32	13/16

Ordering for Optional Steel Finishes

To order black, add "1" at the end of the part number. To order silver, add "2" at the end of the part number. Allow four weeks lead time .

Original Socket Style

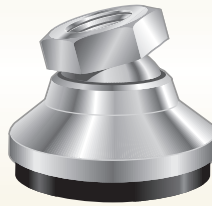

Original Leveling Devices

Inch

Steel with Elastomer Pad

Vlier Socket Style Steel with Elastomer Pads provide a .125 inch neoprene elastomer bonded to the base bottom for non-skid support. Zinc plate with gold chromate finish is standard. Black and clear (silver) finishes are optional and require extra lead time.

Stainless Steel with Elastomer Pad

Vlier Socket Type Stainless Steel with Elastomer Pads offer the advantage of an all-stainless steel design for maximum protection against rust and corrosion.

Special Features

- Non-skid elastomer pad
- Protects floor/surface finish
- Hardened ball
- Large diameter base support
- 15° swivel off centerline

Socket Style - Inch (Elastomer Pad)

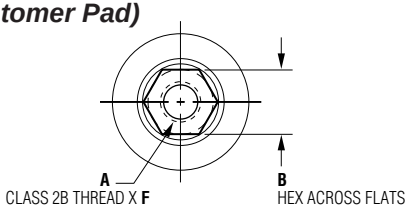

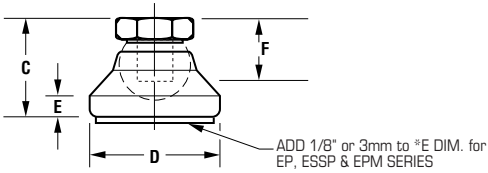

Steel Base w/Elastomer Pad							
Part No.	**Max load (lbs)**	**A**	**B**	**C**	**D**	**E**	**F**
EP298B	525	10-32	3/8	17/32	3/4	7/64	15/64
EP300B	800	1/4-20	1/2	45/64	1	5/32	5/16
EP304B	2,800	3/8-16	5/8	7/8	1 1/4	3/16	3/8
EP306B	3,750	1/2-13	3/4	1 1/8	1 7/8	1/4	7/16
EP308B	4,500	5/8-11	7/8	1 1/4	2 1/2	5/16	7/16
EP310B	5,400	3/4-10	1 1/16	1 1/2	3	1/2	5/8
EP312B	16,400	1-8	1 3/8	1 7/8	4	13/32	13/16

Stainless Base w/Elastomer Pad							
Part No.	**Max load (lbs)**	**A**	**B**	**C**	**D**	**E**	**F**
ESSP298B	525	10-32	3/8	17/32	3/4	7/64	15/64
ESSP300B	800	1/4-20	1/2	45/64	1	5/32	5/16
ESSP304B	2,800	3/8-16	5/8	7/8	1 1/4	3/16	3/8
ESSP306B	3,750	1/2-13	3/4	1 1/8	1 7/8	1/4	7/16
ESSP308B	4,500	5/8-11	7/8	1 1/4	2 1/2	5/16	7/16
ESSP310B	5,400	3/4-10	1 1/16	1 1/2	3	1/2	5/8
ESSP312B	16,400	1-8	1 3/8	1 7/8	4	13/32	13/16

Ordering for Optional Steel Finishes

To order black, add "1" at the end of the part number. To order silver, add "2" at the end of the part number. Allow four weeks lead time .

Original Socket Style

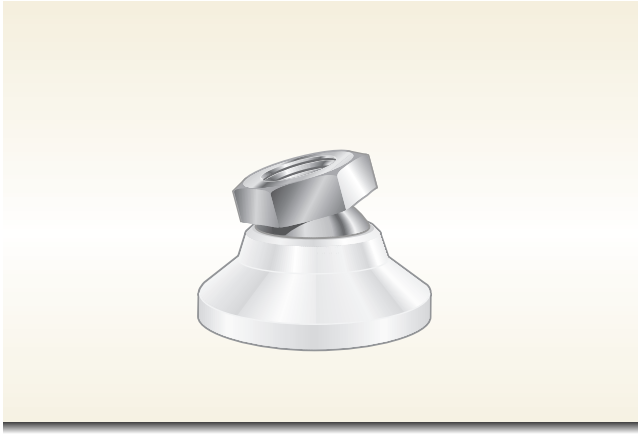

Original Leveling Devices

Inch-Standard Length

Delrin® Base with Steel Socket

Vlier Delrin Base/Steel Socket Leveling Devices feature steel sockets and Delrin plastic bases that provide protection for floor and surface finishes. Delrin offers high resistance to repeated impacts, moisture, solvents and heat up to 190°F. Zinc plate with gold chromate finish is standard. Black and clear (silver) finishes are optional and require extra lead time.

Delrin® Base with Stainless Steel Socket-NEW

Stainless steel offers additional protection against rust and corrosion.

Special Features

- Protects floor/surface finish
- Hardened ball
- Large diameter base support
- 15° swivel off centerline

Socket Style - Inch (Delrin®)

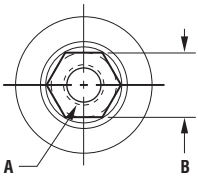

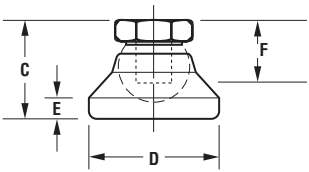

Delrin Base							
Part No.	**Max (Lbs)**	**A**	**B**	**C**	**D**	**E**	**F**
NP298B	150	10-32	3/8	17/32	3/4	7/64	15/64
NP300B	200	1/4-20	1/2	45/64	1	5/32	5/16
NP304B	300	3/8-16	5/8	7/8	1 1/4	3/16	3/8
NP306B	700	1/2-13	3/4	1 1/8	1 7/8	1/4	7/16
NP308B	1200	5/8-11	7/8	1 1/4	2 1/2	5/16	7/16
NP310B	1800	3/4-10	1 1/16	1 1/2	3	1/2	5/8
NP312B	2400	1–8	1 3/8	1 7/8	4	13/32	13/16

Delrin® Base, Stainless Steel Socket							
Part No.	**Max load (lbs)**	**A**	**B**	**C**	**D**	**E**	**F**
SSNP298B	150	10-32	3/8	17/32	3/4	7/64	15/64
SSNP300B	200	1/4-20	1/2	45/64	1	5/32	5/16
SSNP304B	300	3/8-16	5/8	7/8	1-1/4	3/16	3/8
SSNP306B	700	1/2-13	3/4	1-1/8	1-7/8	1/4	7/16
SSNP308B	1200	5/8-11	7/8	1-1/4	2-1/2	5/16	7/16
SSNP310B	1800	3/4-10	1-1/16	1-1/2	3	1/2	5/8
SSNP312B	2400	1-8	1-3/8	1-7/8	4	13/32	13/16

Ordering for Optional Steel Finishes

To order black, add "1" at the end of the part number. To order silver, add "2" at the end of the part number. Allow four weeks lead time.